Precast Bridge Bents for Seismic Regions

John Stanton, Marc Eberhard
Philip Davis, Olafur Haraldsson, Todd Janes, Hung Viet Tran.

University of Washington, Seattle.

PEER TSRP Meeting
Berkeley 2011.05.02

Background

- Traffic congestion.
- Need to accelerate on-site bridge construction.
- Use precast concrete components.
- Connection details need to be:-
  - seismic-resistant
  - readily constructible.

Background

- Have developed a family of connections
- Mix and match to suit conditions
  - Large bars in grouted ducts (column to cap beam)
  - Socket connections (column to footing)

Background

Self-centering structural systems

- Unbonded prestressing tendons for elastic restoring force.
- Yielding steel for energy dissipation.

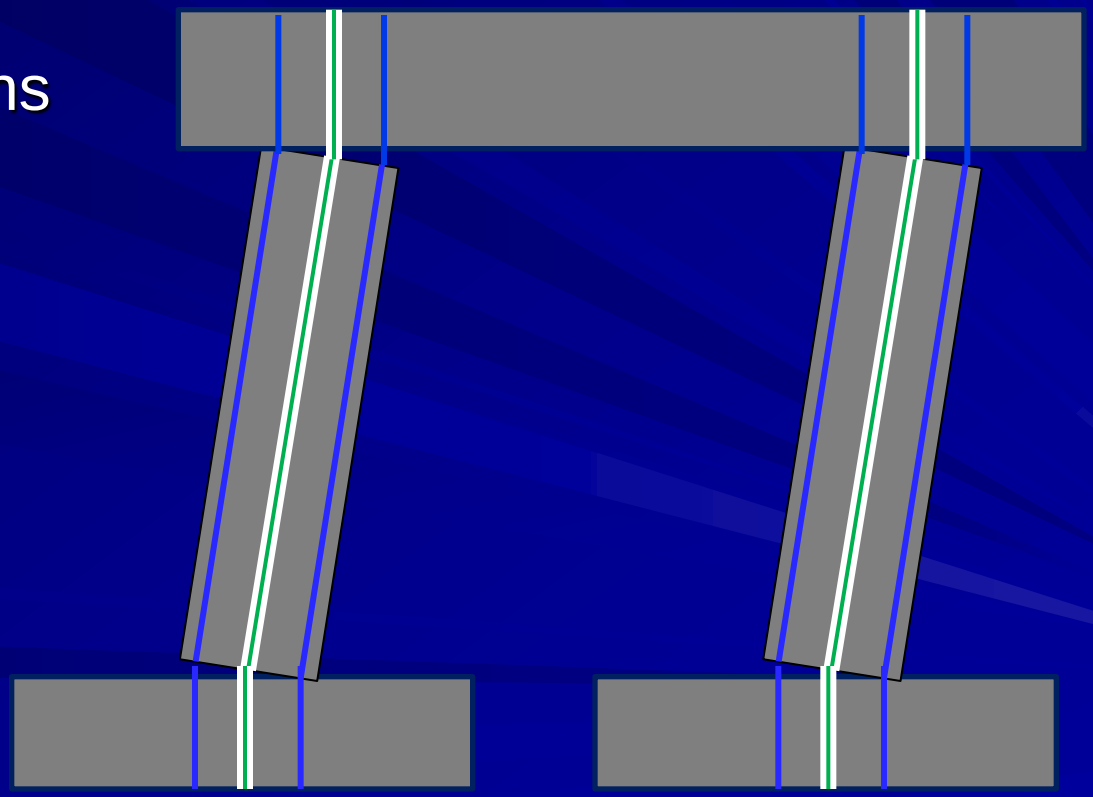

Project Tasks

Self-centering performance.

- Laboratory tests to investigate ways of incorporating self-centering into ABC systems.

Work is ongoing (Janes, Davis).

Proposed Construction Procedure

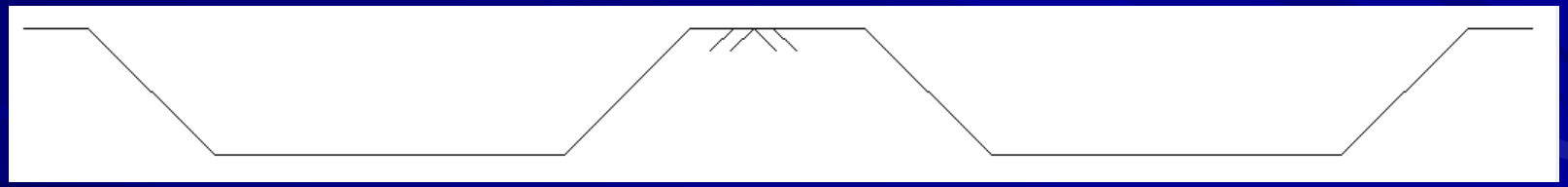

1) Excavate footing.

Proposed Construction Procedure

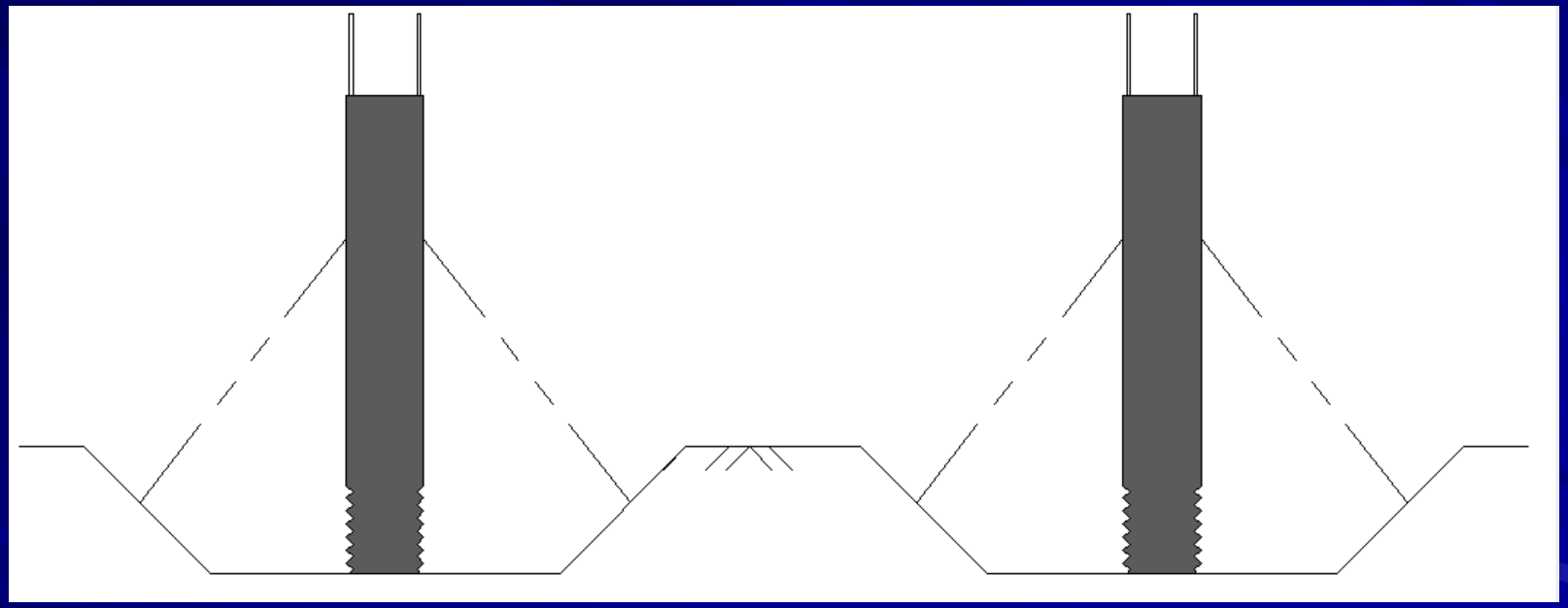

2) Position and brace precast column.

Proposed Construction Procedure

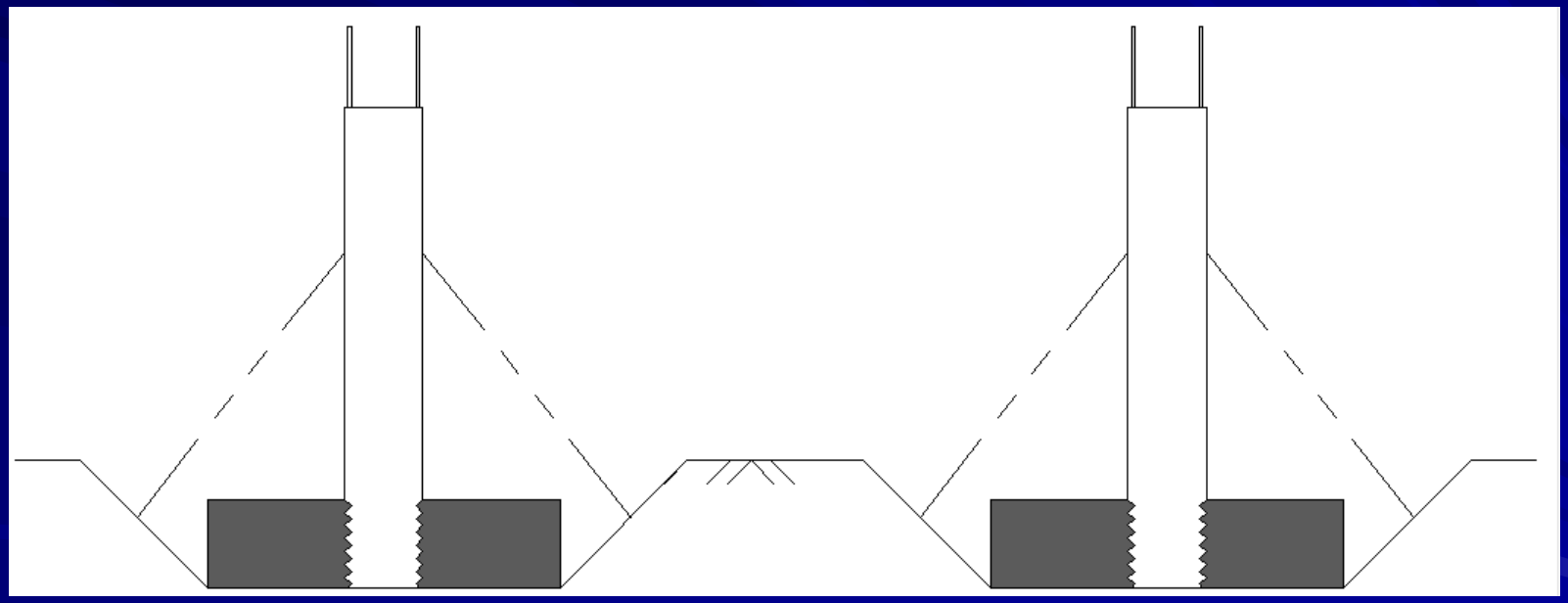

3) Place footing reinforcement and cast.

Proposed Construction Procedure

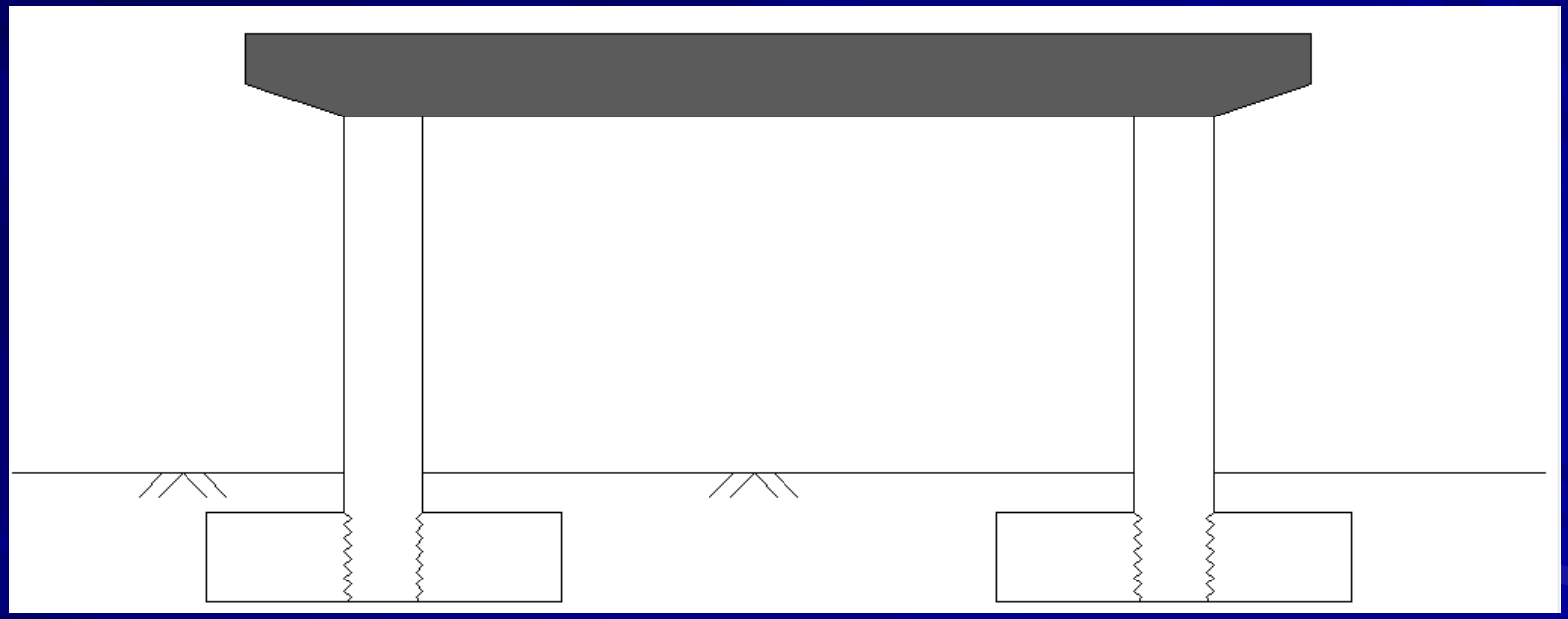

4) Set cap-beam, grout bars into ducts.

Proposed Construction Procedure

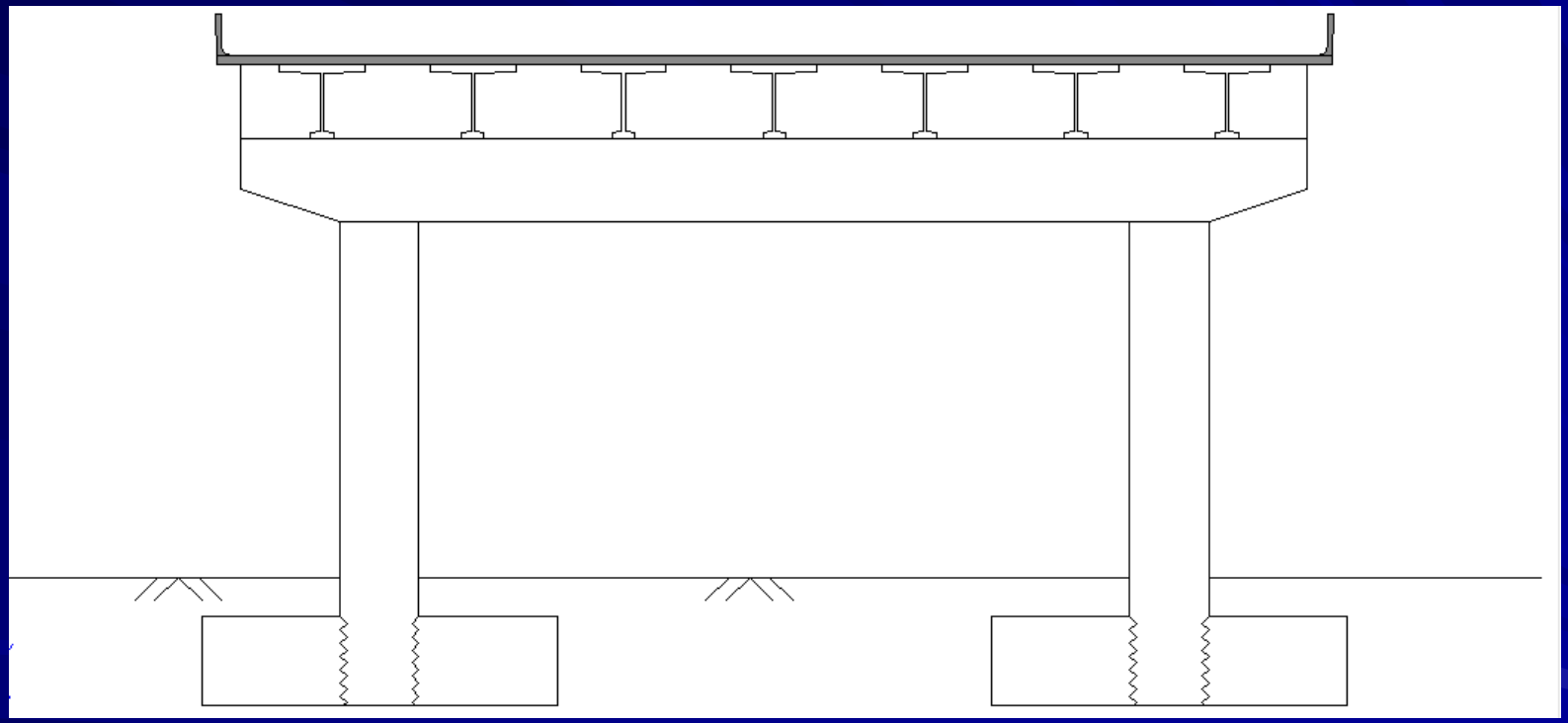

5) Place girders, diaphragms and deck.

Connection Details

	c.i.p. RC (ref)	Precast RC	Precast prestressed
Cap-beam to column	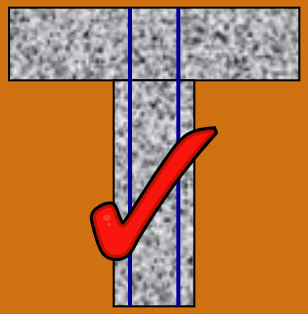	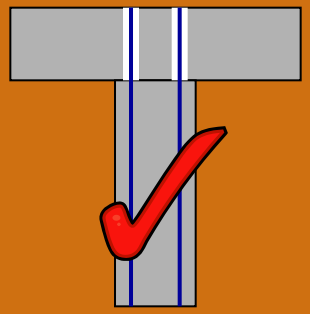	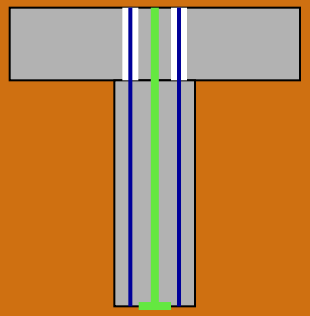
Column to spread footing		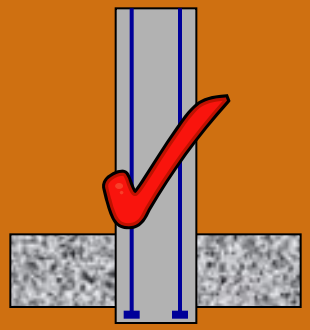	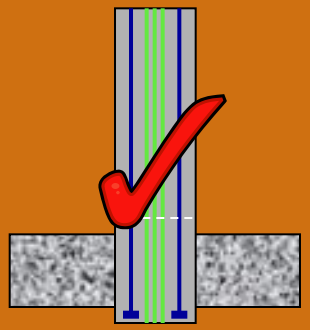
Column to drilled shaft		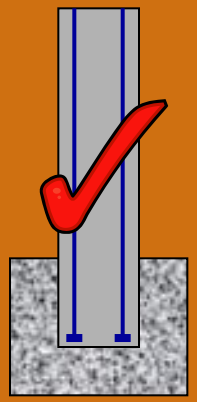	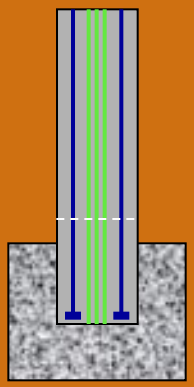

Cap Beam Connection – Seismic test

Failure occurs in the column.

Large-bar precast connection behaves the same as a cast-in-place connection.

Footing Connection - Headed Bars

Headed bars provide good anchorage.

Internal forces:

Strut and Tie Model.

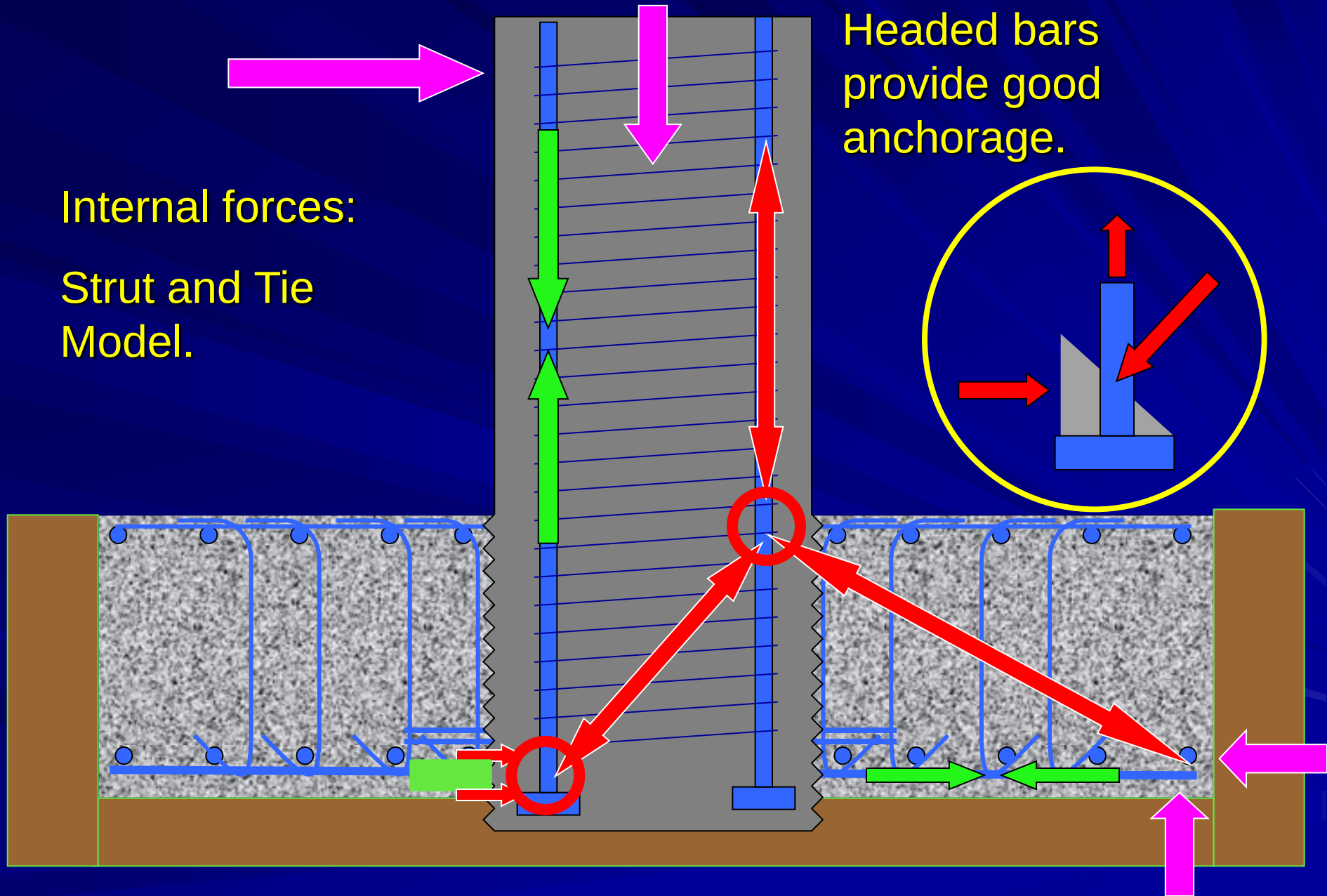

Footing Connection

Hooked bars facing out
(Conventional cip configuration)

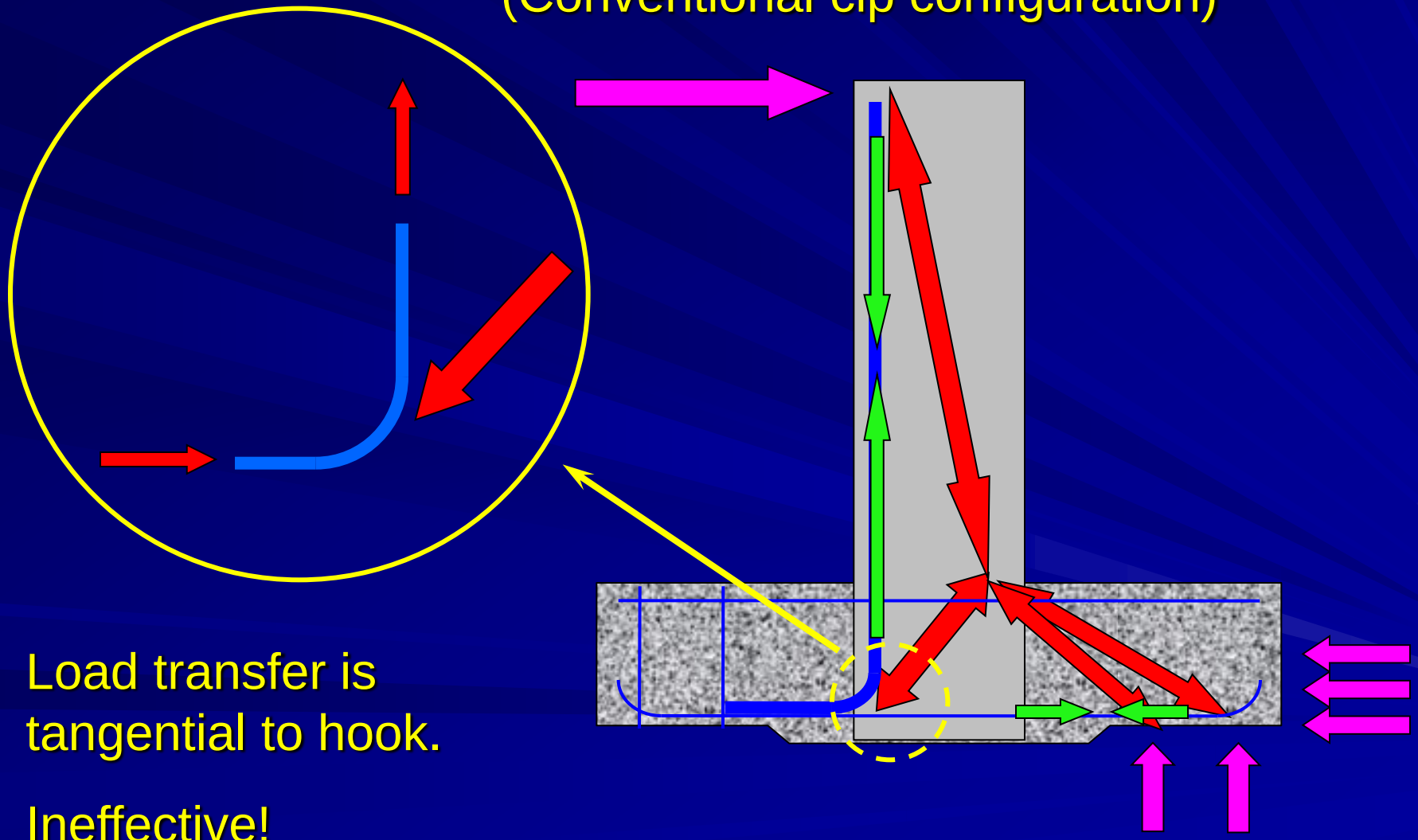

Load transfer is tangential to hook.

Ineffective!

Spread Footing Connection - Test

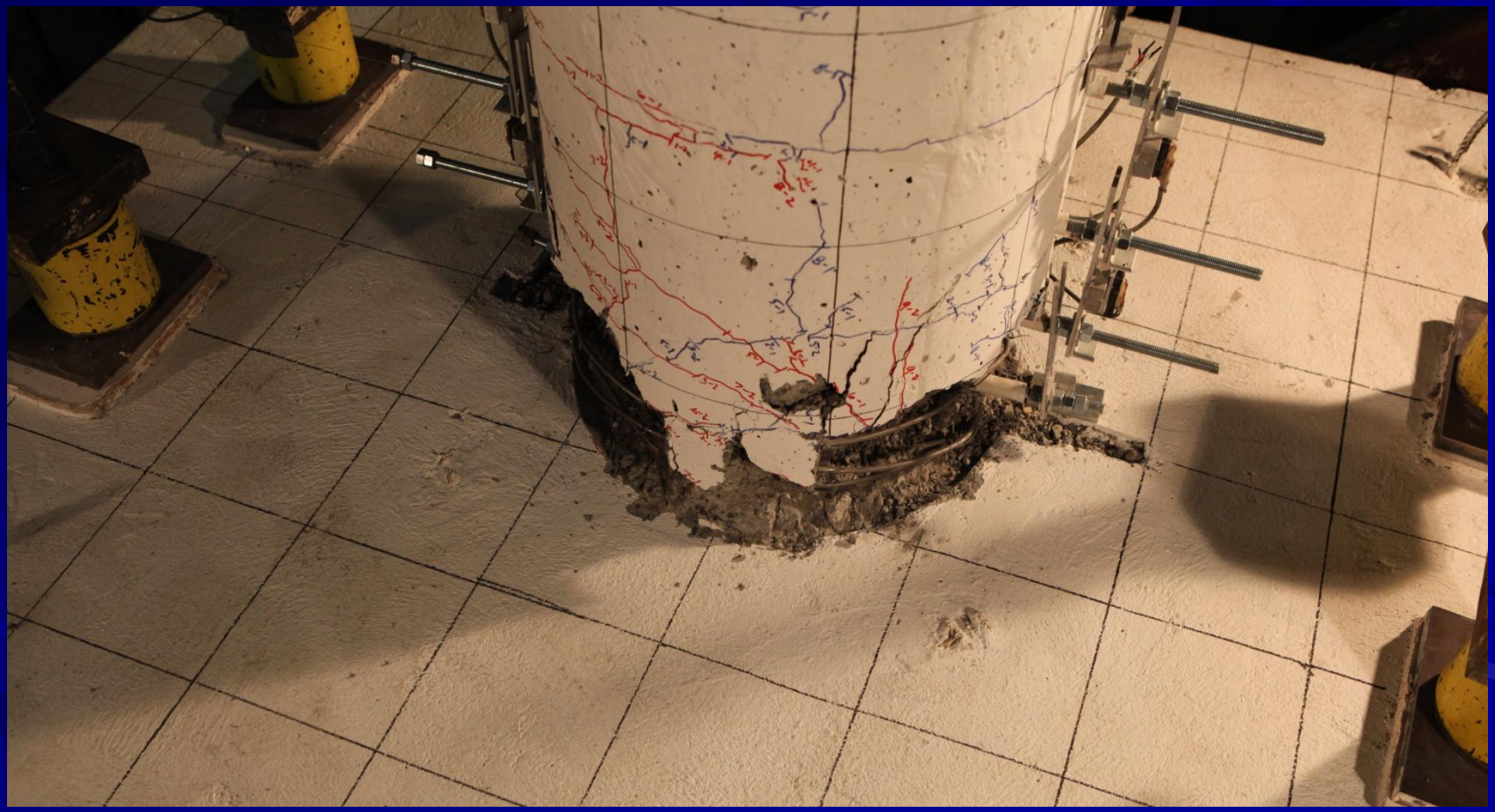

After seismic testing. Foundation undamaged.

Spread Footing Connection – Seismic Test

Failure in column.

Footing undamaged.

Behavior identical to conventional c.i.p. system.

Seismic performance exactly as wanted.

Spread Footing Connection
Conclusions

1. Shorter on-site construction time.
2. Simple to fabricate, transport and erect.
3. Footing undamaged in lateral load and vertical load tests.
4. Seismic performance as good as, or better than, conventional c.i.p. construction.

Site Implementation - Footing

Spread Footing
Pre-tensioned system

1. Pre-tensioning solves corrosion problems perceived to exist in post-tensioning.
2. Pre-tension in a plant.
   - Good QC.
   - Special equipment and extra site time for post-tensioning are not needed.
   - Can add rebars for energy dissipation.
3. Configuration of connection to cap beam?

Pre-tensioned System Connections

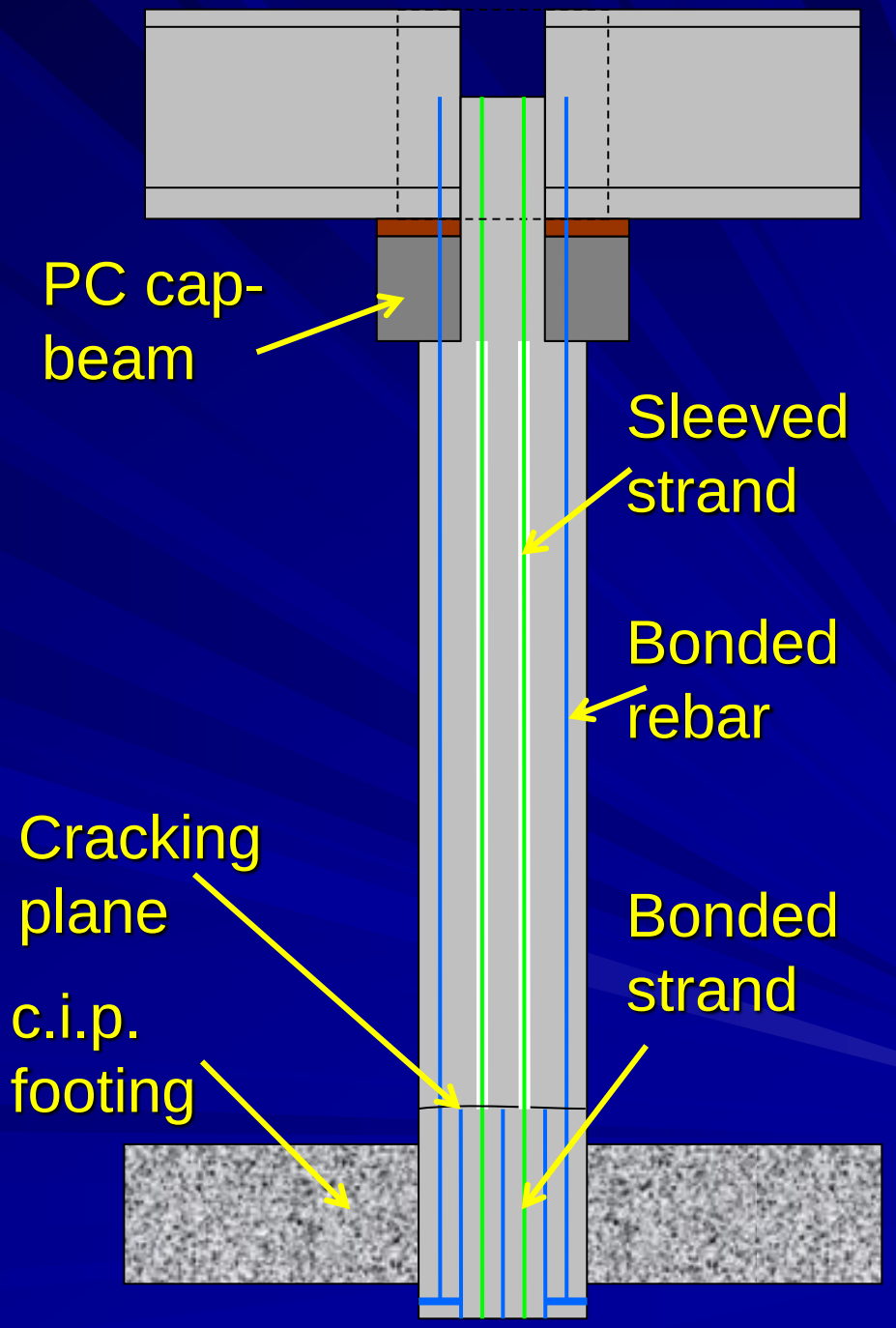

Spread Footing
Pre-tensioned system

Strand needs to be:

- Debonded over much of column height.
- Anchored at top and bottom.
- Use epoxy strand for good bond

Spread Footing
Pre-tensioned system

Test specimens.

- One footing connection
- One cap-beam connection

Test Specimens

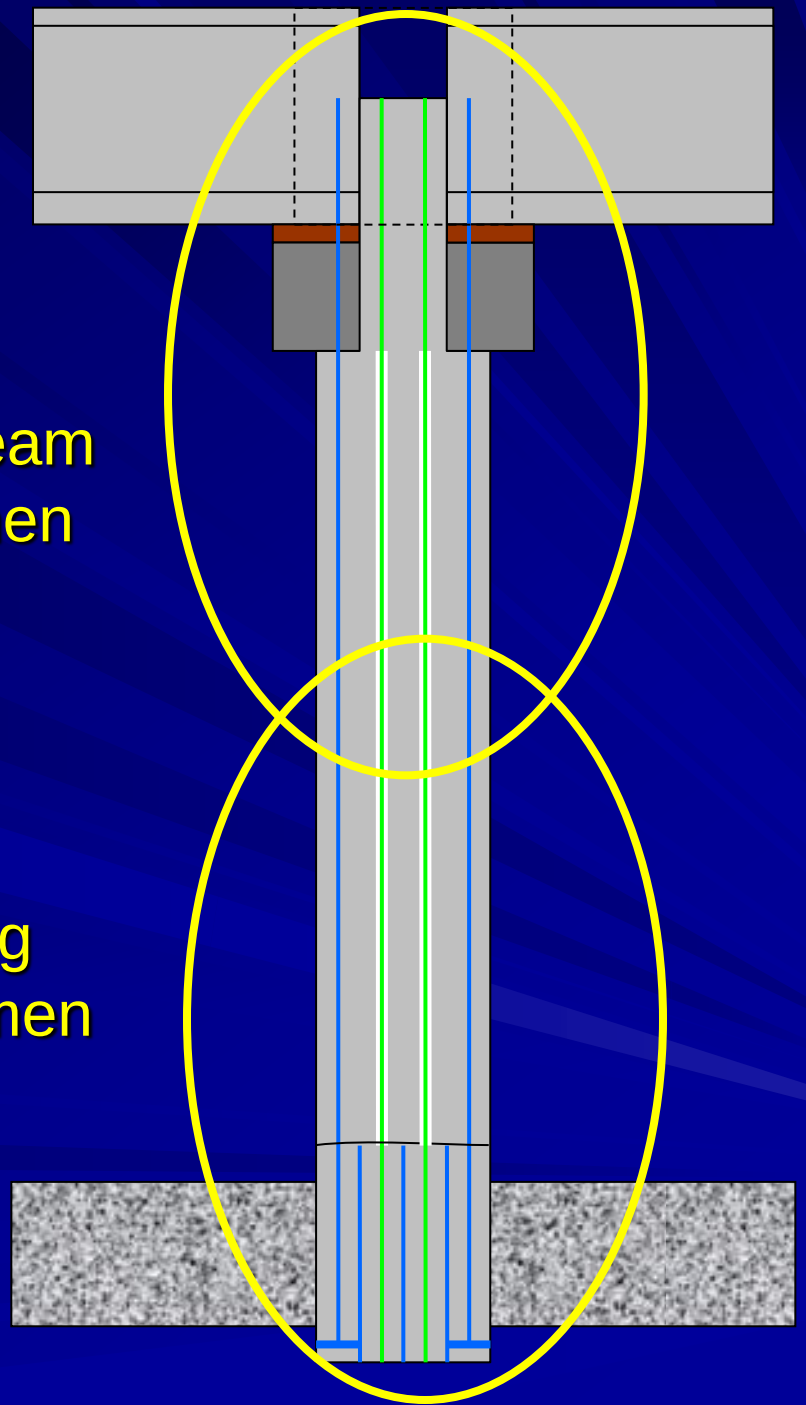

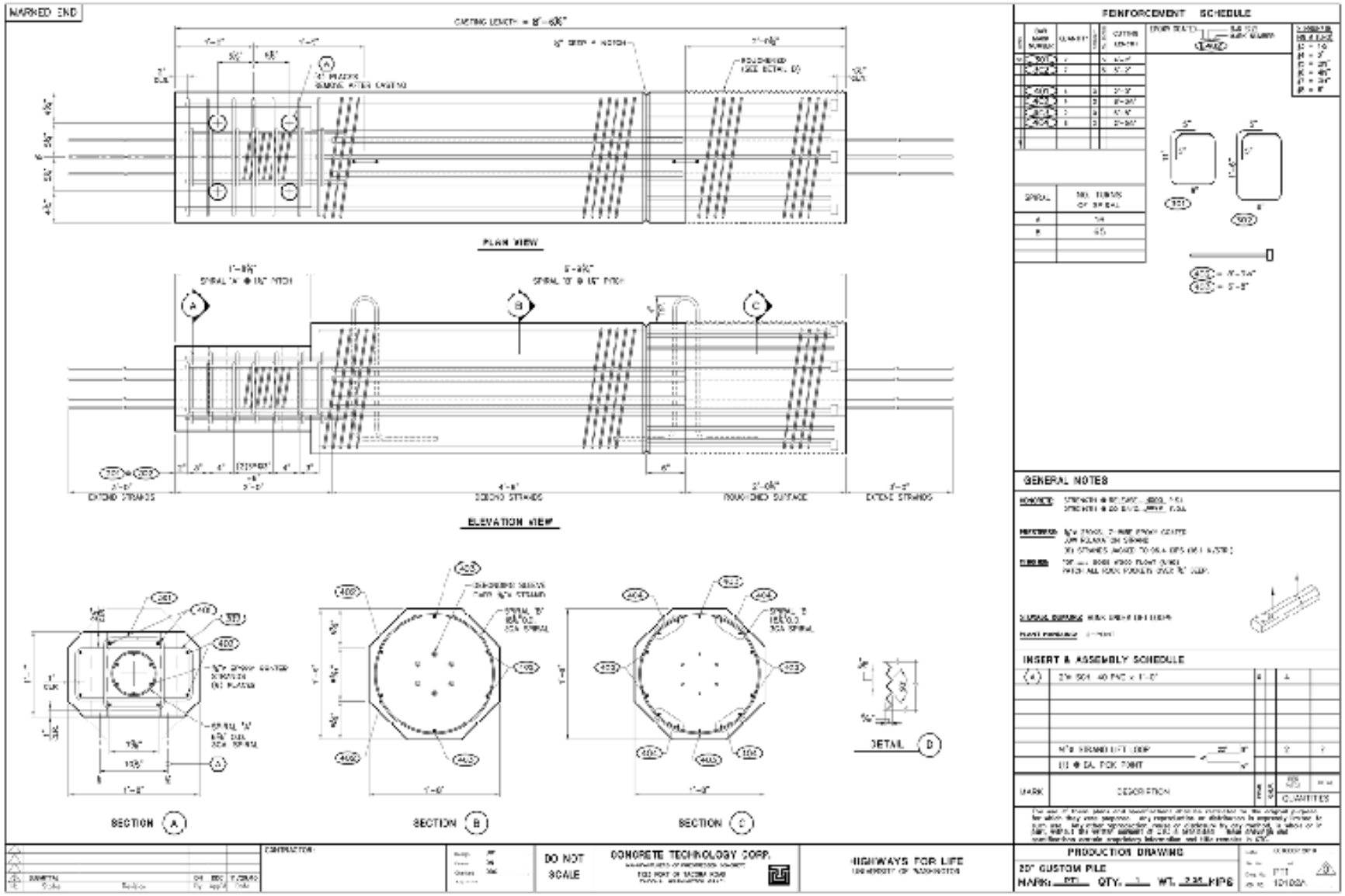
MARKED END
PLAN VIEW
ELEVATION VIEW
SECTION A
SECTION B
SECTION C
DETAIL D
REINFORCEMENT SCHEDULE
GENERAL NOTES
INSERT & ASSEMBLY SCHEDULE
DO NOT SCALE
CONCRETE TECHNOLOGY CORP.
HIGHWAYS FOR LIFE
PRODUCTION DRAWING

MARKED END

CASTING LENGTH = 8'-7 3/8"

PLAN VIEW

ELEVATION VIEW

SECTION (A)

SECTION (B)

SECTION (C)

DETAIL (D)

REINFORCEMENT SCHEDULE

	501	4		4	4'-7"
	502	2		4	3'-7"
	401	1	3	2'-3"	
	402	2	3	2'-3"	
	403	1	3	2'-7"	
	404	2	3	2'-7"	

SPIRAL	NO. TURNS OF SPIRAL
A	14
B	11
C	21

GENERAL NOTES

CONCRETE: STRENGTH @ 28 DAYS ...

REINFORCING: ...

FINISHING: ...

SPIRAL REBAR: BAR CHECK LIFT LOOPS

PLANT PRODUCED: ...

INSERT & ASSEMBLY SCHEDULE

(A)	3/4" SQ. 40 PVC x 1'-0"	4	4	
	M16 GRADE 8 LIFT LOOP		2	2
	111 @ DIA. FOR TOWIT			

MARK	DESCRIPTION	TYPE	CLASS	NO. REQ'D	REMARKS
				QUANTITIES	

CONTRACTOR

DO NOT SCALE

CONCRETE TECHNOLOGY CORP.

HIGHWAYS FOR LIFE

UNIVERSITY OF WASHINGTON

PRODUCTION DRAWING

20' CUSTOM PILE

MARK: 272 QTY: 1 WT. 217 KIPS

DWG. NO. 272

10/10/04

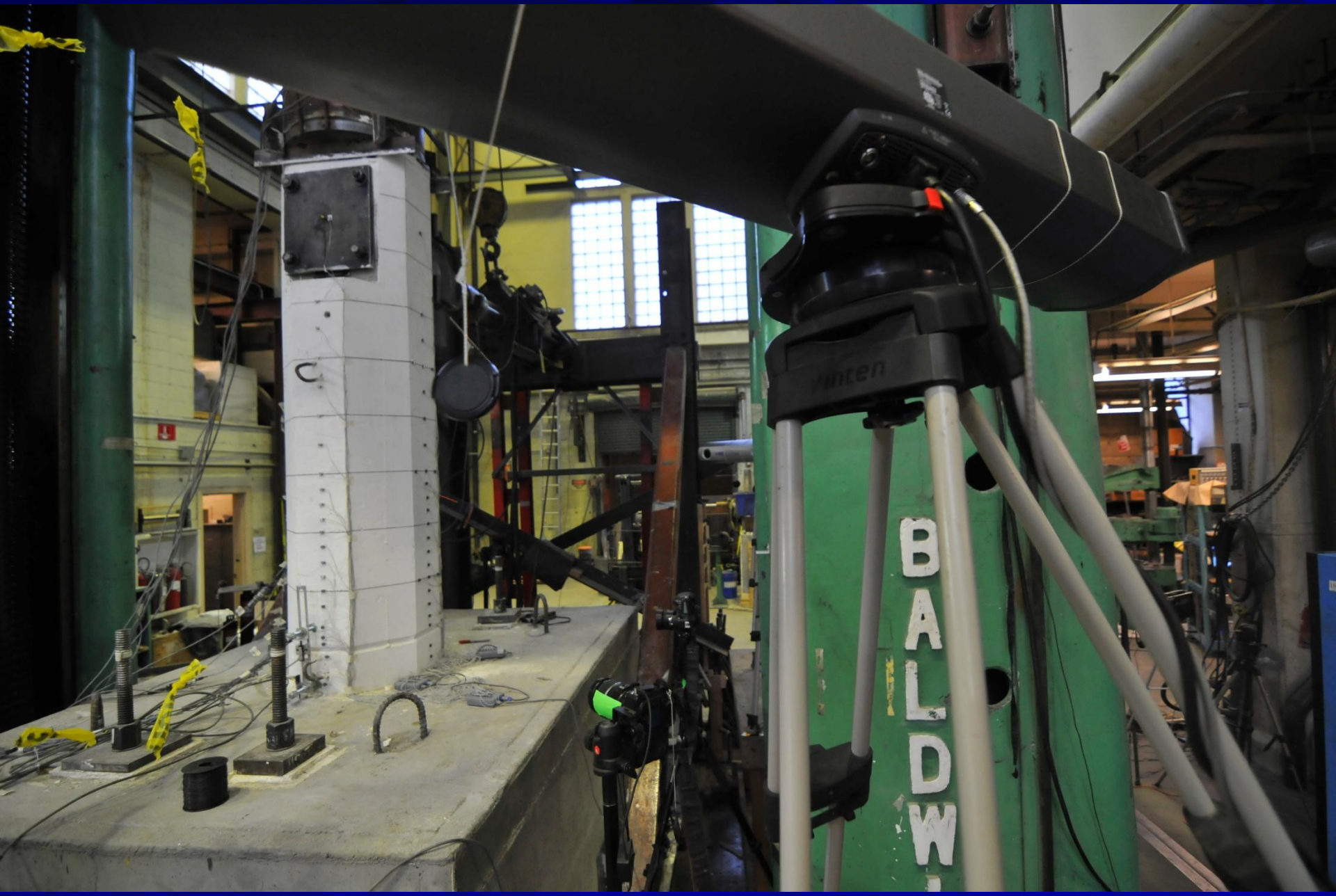
Vinten
BALDW

Preliminary Results

1. Re-centering good up to 4% drift.

Load vs. Displacement

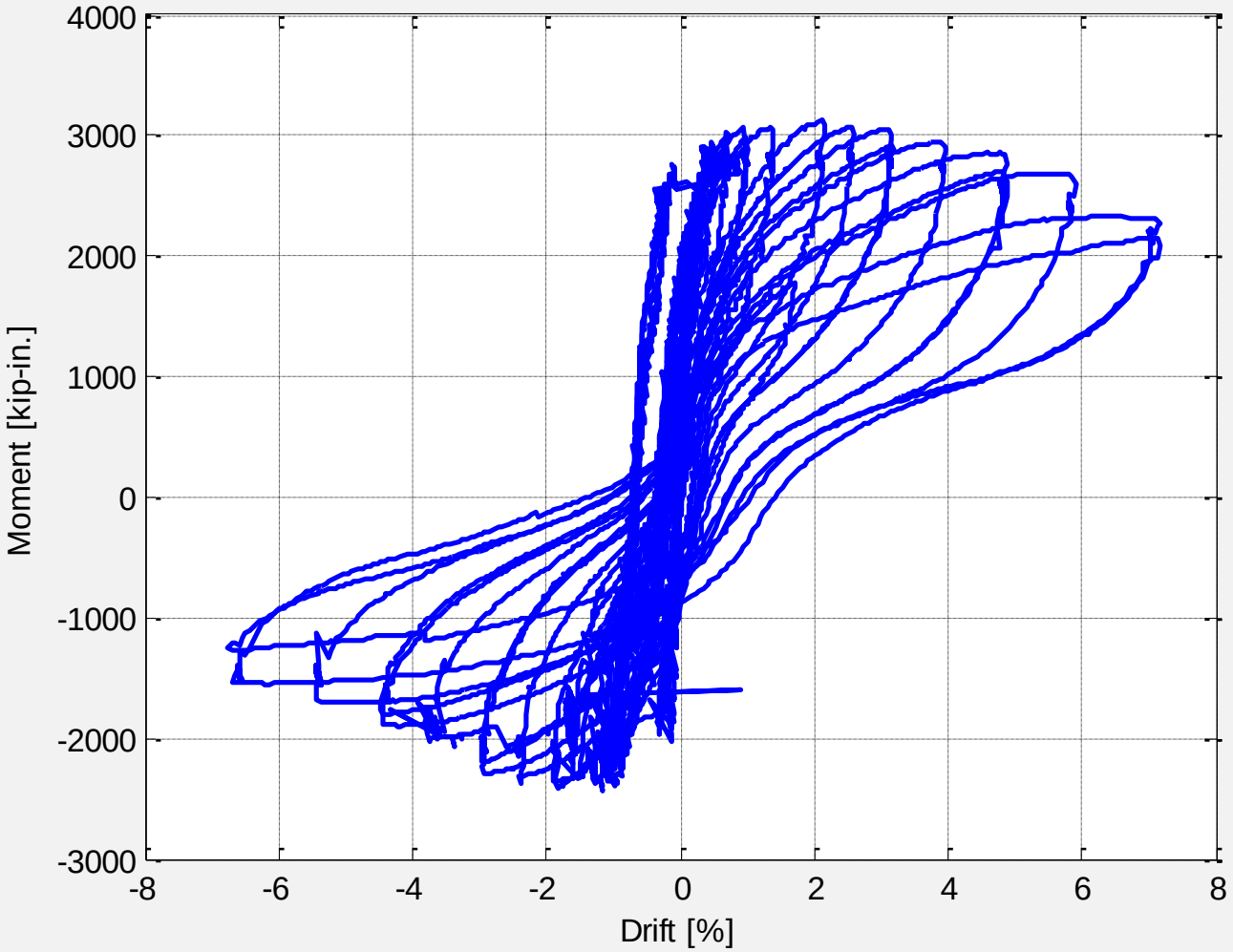

Preliminary Results

1. Re-centering good up to 4% drift.
2. Failure initiated by bar buckling, followed by fracture.
3. No strands broke.
4. Damage to concrete at interface, possibly promoted by stub bars from footing.

2% drift

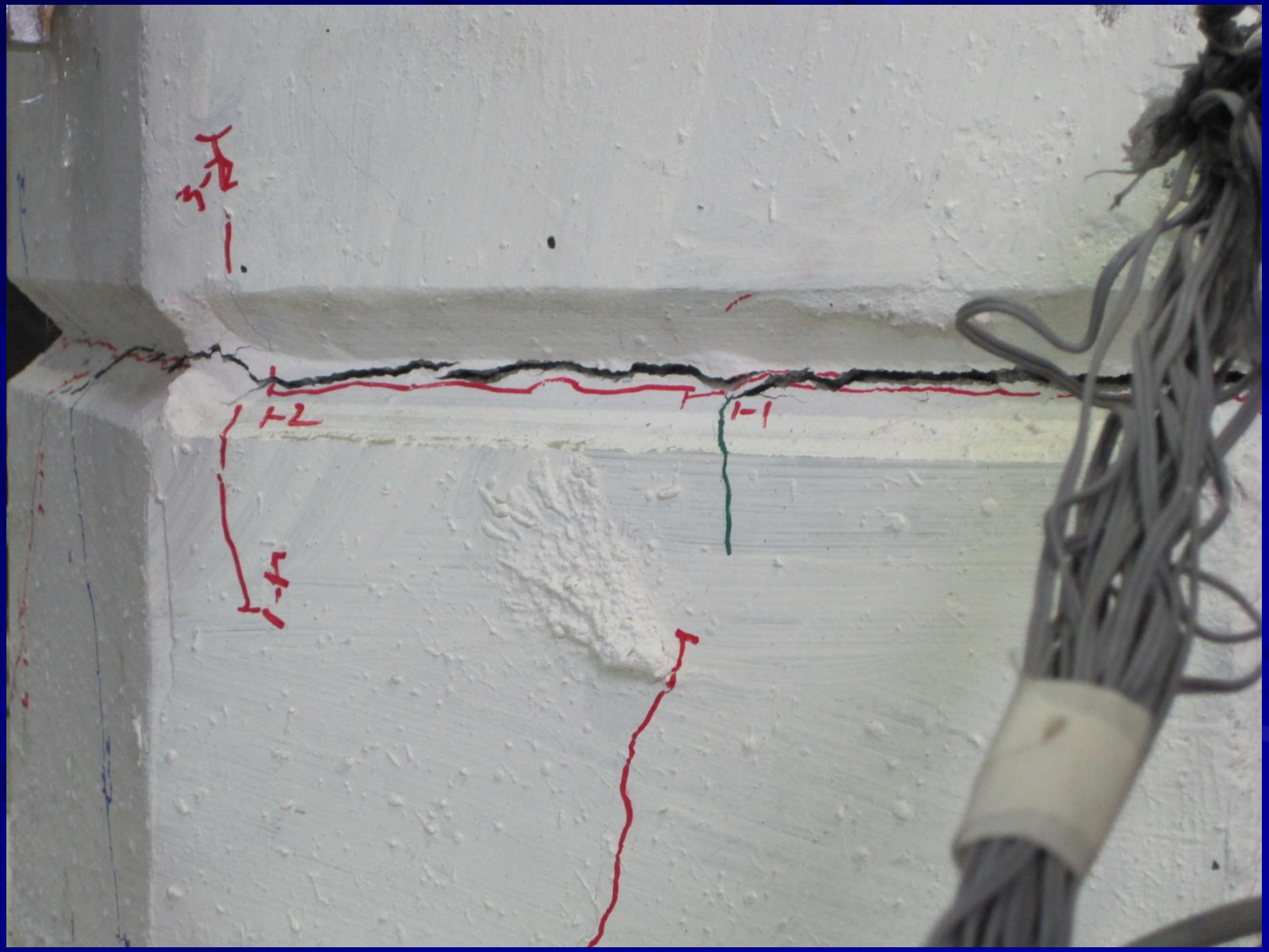

6% drift

Next Steps

1. Assemble and test cap beam specimen.
2. Data analysis
3. Strand bond tests

The End